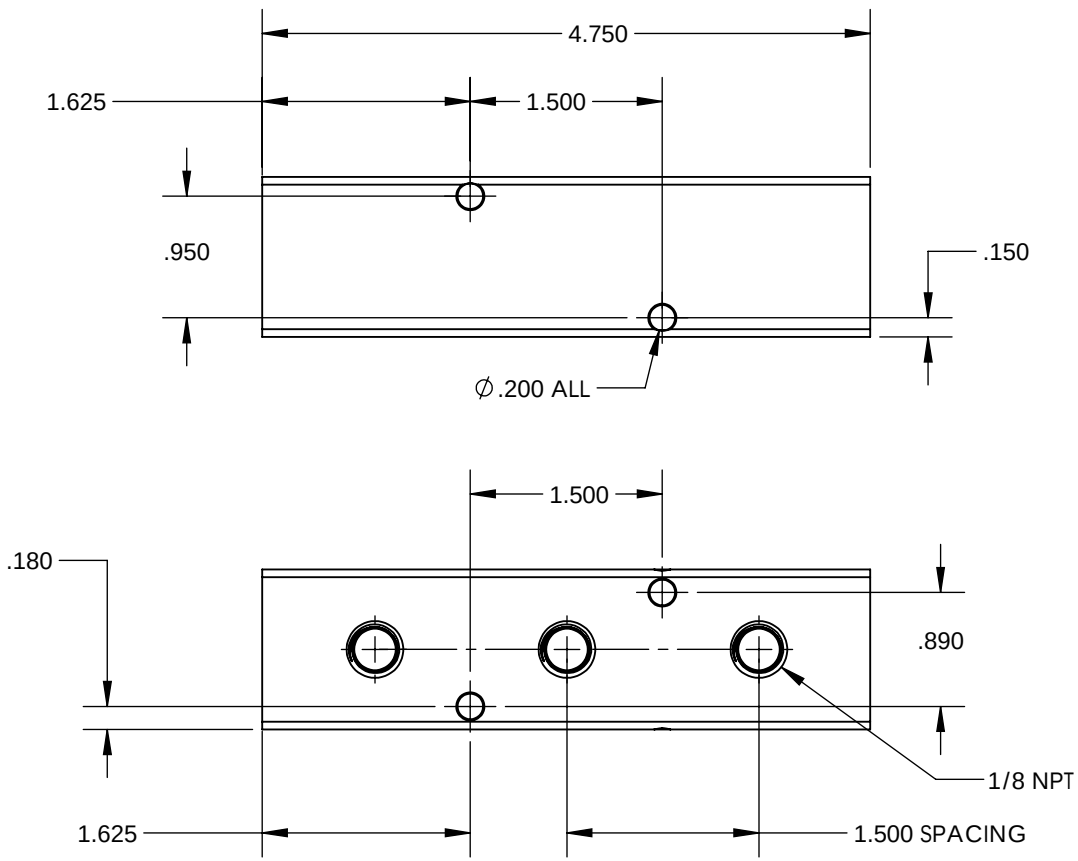

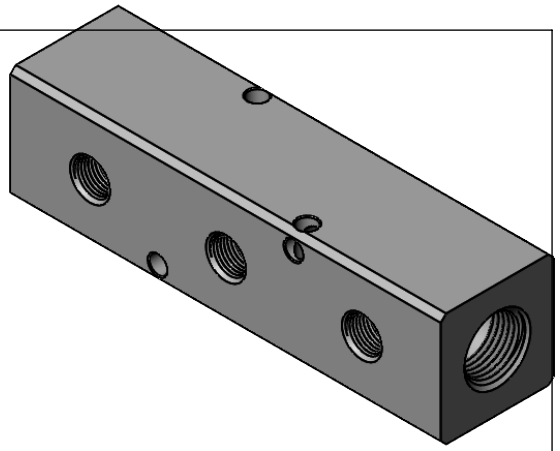

MATERIAL: BLACK ANODIZED ALUMINUM

OPTIONAL MATERIALS AVAILABLE
UPON REQUEST:
- NYLON
- POLYPROPYLENE
- STAINLESS STEEL
- NICKEL PLATED ALUMINUM

CONFIDENTIAL
Information contained in this document or drawing is confidential and proprietary to Polyconn. This document may not be reproduced without written permission from Polyconn. All rights of design, invention and copyright are reserved

TOLERANCES:
.xx = ±.01"
.xxx = ±.005"
.xxxx = ±.002"
FRAC. = ±1/64"
ANGLES = ±1/2°

UNLESS OTHERWISE NOTED

DRAWN BY:	DATE:
TAP	12/06/22
CHECKED BY:	DATE:
APPROVED BY:	DATE:

POLYCONN

SIZE:	TITLE			REV:
A	3/8" NPT INLET, 1/8" NPT OUTLET			01
DO NOT SCALE DRAWING	DIMENSIONS ARE IN INCHES UNLESS OTHERWISE NOTED	SCALE: 1:1.5	SHEET 1 OF 1	DWG NO. PCM20-125-03BW